Order #:
Allura-6 192x216-SMD
120V / 1217W / 10.1A / 189LBS / Per Face
208V / 1217W / 5.8A / 189LBS / Per Face

Please Keep For Service!

ThinkSIGN

Support@thinksign.com
www.ThinkSign.com

NOTES:
1.DISPLAY IS REAR VENTILATED, DO NOT BLOCK UP VENTILATORS.
2.FRONT ACCESS FOR SERVICE.
3.THINKSIGN IS NOT RESPONSIBLE FOR THE MAIN ELECTRICAL DISCONNECT.
4.THINKSIGN IS NOT RESPONSIBLE FOR THE MOUNTING HARDWARE OR THE INTEGRITY OF THE STRUCTURE THE DISPLAY IS MOUNTED TO.

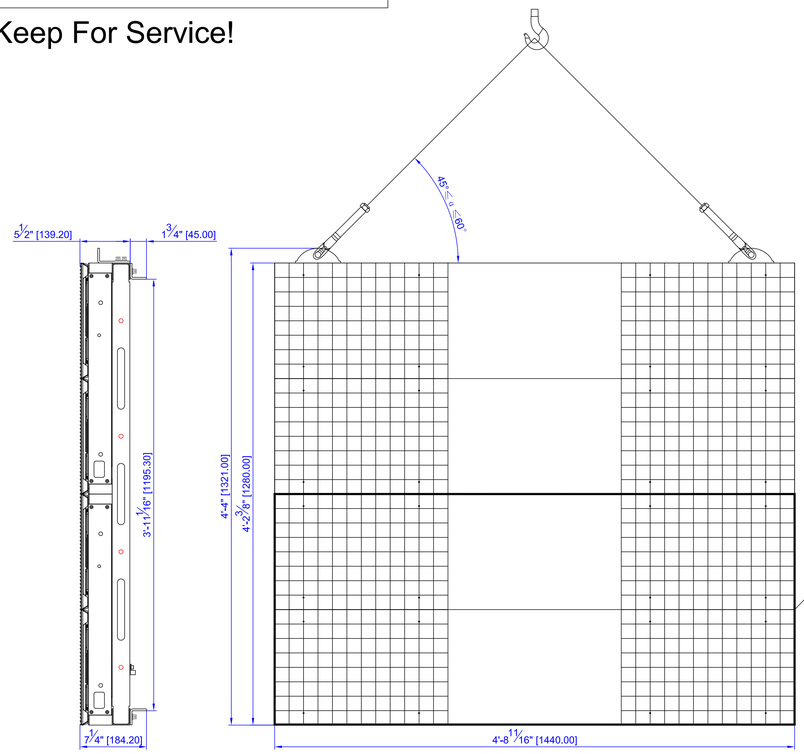

Open the cabinet

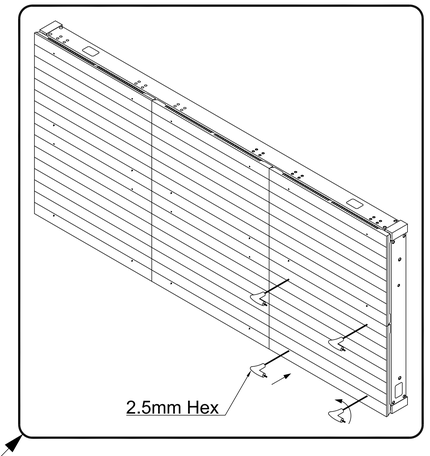

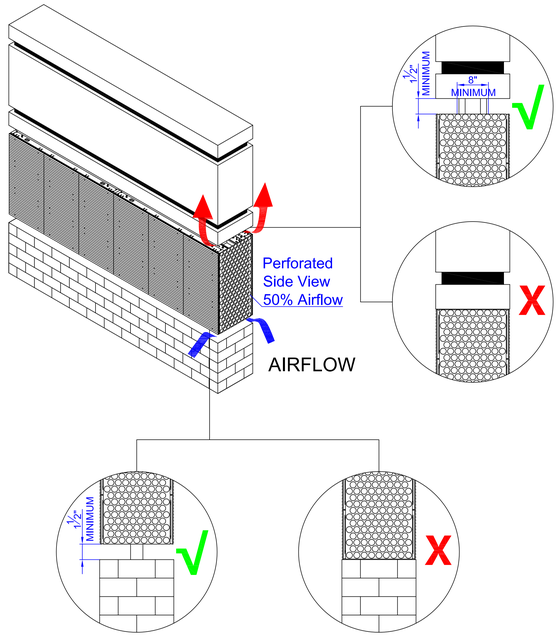

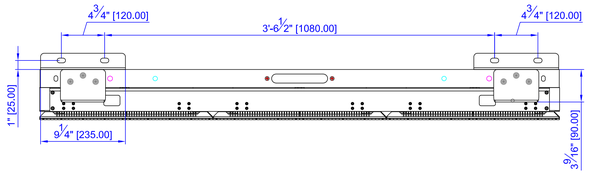

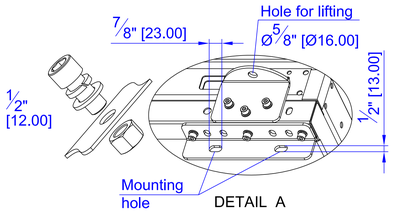

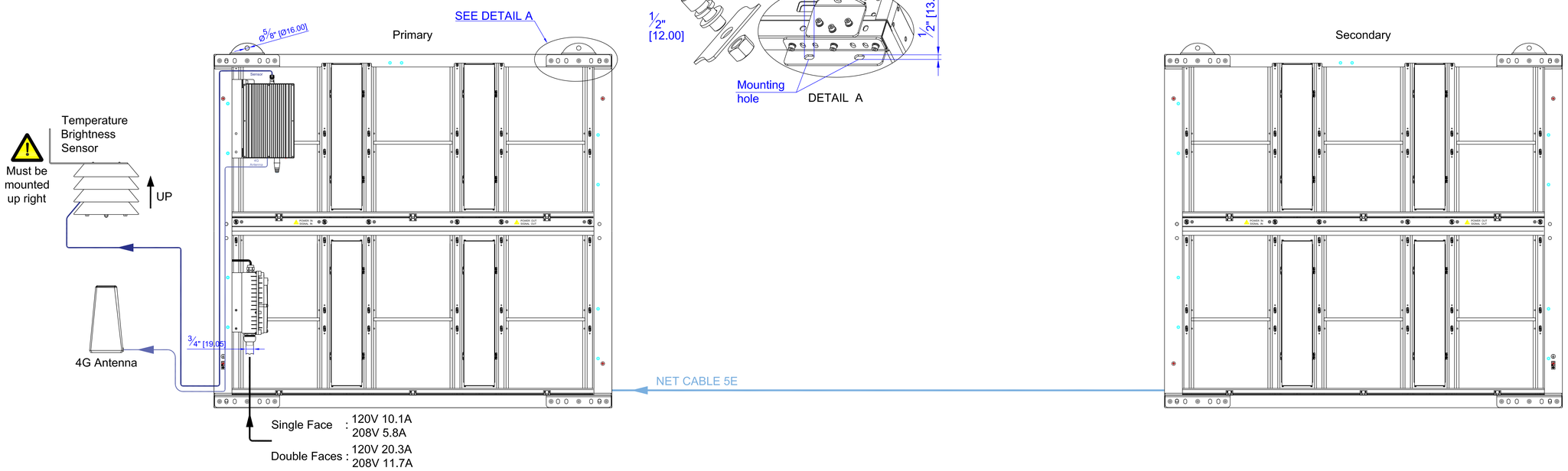

V1